SLSS1-6-SC

Stainless Steel Sliding Door Hardware — Barn Door Top Mount

PRODUCT CUT SHEET

PROJECT:	
SUBMITTED BY:	
DATE:	
NOTES:	

Top Mount Round Track System (With Soft Close) – Track Length 78 ¾"

BHMA CERTIFIED

- Fits 1" To 2" Thick Door Panel
- Brushed Stainless Steel 304
- Side Wall Mount
- Nylon Coated Stainless Steel Wheels for Smooth Operation
- Max Weight Load 220 lbs.
- ANSI/BHMA A156.14 Grade 1 Certified to 100,000 Cycles Including Soft Close Feature
- 5-year Warranty
- Order Two Sets for Bi-parting Applications
- Soft Close / Open Hardware is Included for Both Directions in Addition to the SLSS1-6 Complete Kit Contents

Complete Kits Include:

(1) **Track** with Soft Close
(2) Hangers
(2) Door Stops
(1) Floor Guide

SLSS1-6 includes: (5) Wall Attachments

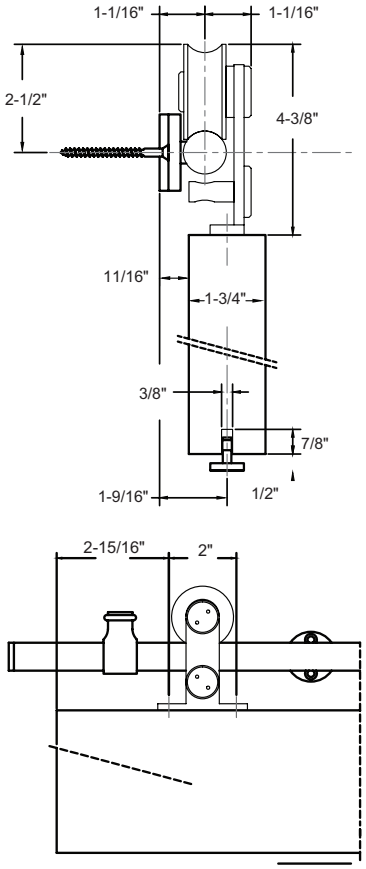

Note: For Door Sizing Refer to Installation Instruction.

NGP-SLSS1-6-SC-PCS-0920-B

NATIONAL GUARD PRODUCTS, INC. 4985 East Raines Road | Memphis, TN 38118 | Phone: (800) 647-7874 | Fax: (800) 255-7874

ngp.com