LOCINOX

Chain link adapters;Adaptors

RAIL-FIT

https://www.locinoxusa.com/gate-hardware/accessories-for-locks-keeps/adaptors/p00002629

Stainless steel accessory for installation of the gate closer rails on alternative fencing. The accessory can be clamped onto any bar to mount the rail of the Panther, Lion or Verticlose-2(-WALL) gate closer.

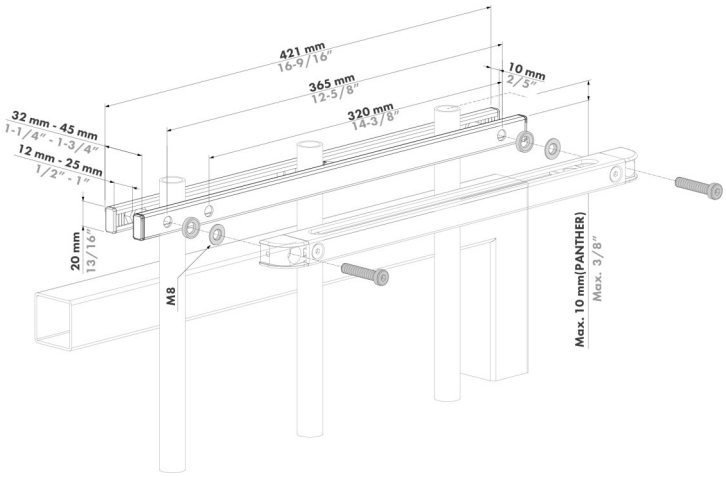

TECHNICAL SPECIFICATIONS