CATALOG

SPECIALTY CLOSERS

HIGH-END SECURITY GATE SOLUTIONS

NORTON RIXSON

ASSA ABLOY

Experience a safer and more open world

TABLE OF CONTENTS

SPECIALTY CLOSERS

General Information 3
How to Select Product 4
Options 5
Certifications 6
Limited Warranty 6
Specifications 6

Interior Gate Closers

354 Flange Mounting 1-3/4" Gate Only 7
355 Flange Mounting 1-3/4" Gate Only 7
356 Flat Arm 8
357 Flat Arm 8
359 Independently Hung (hanging means by others) 9
Parts 10-12

Exterior Gate Closers

1351 13

Security Closers

SEC27-180 Closer 14
Parts 15

Quick Reference of Options 16
How to Order 16

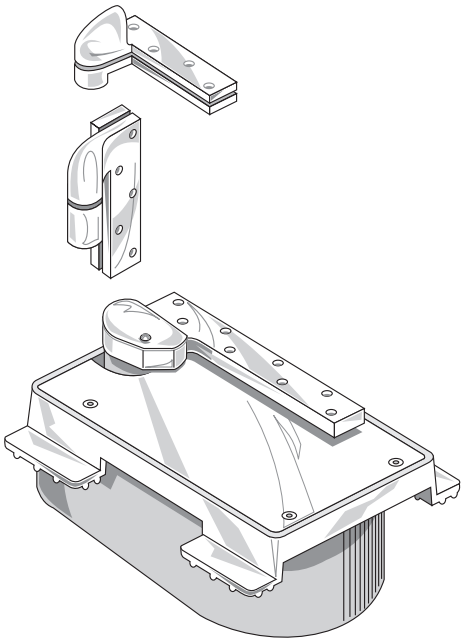

SEC27-180 Closer with FA180 top pivot and FA19 intermediate pivot (recommended)

WARNING

This product can expose you to lead which is known to the state of California to cause cancer and birth defects or other reproductive harm. For more information go to www.P65warnings.ca.gov.

GENERAL INFORMATION

SPECIALTY CLOSERS

The closers in this section are for specific niche markets.

GATE CLOSERS MODELS 354, 355, 356, 357, 359

Closers that mount to the side jamb for small gates such as teller gates, courtroom gates.

- Closer mounts off the floor approximately 6" under the door
- Double acting with a hold open option
- Single acting when used with butts

EXTERIOR GATE CLOSERS MODEL 1351

Surface closers and tracks used on high-end residential and commercial ornamental iron fencing systems that must be self-closing.

- Extremely easy to install
- Uses surface closer technology

HIGH-SECURITY MODELS SEC27-180

These closers are used on doors in detention areas in hospitals, detention centers and non-cell prison doors. The weight of the door is supported at bottom.

- Door swings with less resistance
- Heavier doors can be accommodated
- Reduced stress on frame

Fasteners are in shear, not tension

- Eliminates door sag
- Vertically adjustable

Heavy-duty hardened steel spindles

- Designed to provide positive dead stop
- Thrust bearing supports vertical load
- Needle bearings for lateral force

Bottom arm directly attached to closer spindle

- A mechanical advantage that increases efficiency
- One-to-one ratio of door swing to spindle rotation makes controls more precise

Helical torsion spring

- Operates in same direction as door movement and contributes to even higher closer efficiency
- A torsion spring has a much longer life than standard compression springs

Advantages of security concealed floor closers

- Vandal resistant – mechanism not exposed
- Supplied with Torx® screws

1. OFFSET VS. CENTER HUNG APPLICATION

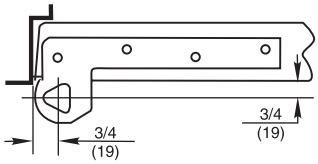

3/4" Offset

Pivot point located 3/4" from the heel edge of the door and 3/4" from face of door.

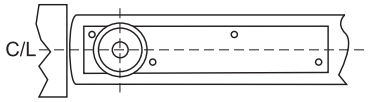

Center Hung

Pivot point centered in thickness of door. Distance from heel edge can vary 2-3/4 and up (Not for use on fire rated doors).

2. SIZE OF DOOR (WIDTH, HEIGHT, THICKNESS)

Estimated door weights pounds per square foot (PSF)

DOOR MATERIAL	DOOR THICKNESS		
	1-3/4"	2-1/4"	3
Hollow Metal	6.5	7	—
Solid Core Wood	7	9	11.5
Aluminum/Glass Storefront	3.5	4	—
MDF	7	9	11.5
DOOR MATERIAL	**3/8"**	**1/2"**	**3/4"**
Tempered Glass	5	7	9.75

Example: **3/0 X 7/0 X 1-3/4" WD**
Door: 21sq ft x 7lb.sq ft = 147lbs

Example: **3/6 X 8/0 X 1/2" Tempered Glass Door**
Door: 28sq ft x 7lb./sq ft = 196lbs

For doors of other sizes consult factory

3. EXPECTED FREQUENCY OF DOOR OPERATION

APPLICATION	DAILY	YEARLY	
Large department store entrance	5,000	1,500,000	
Large office building entrance	4,000	1,200,000	
Theater entrance	1,000	365,000	
School entrance	1,250	225,000	High
School restroom door	1,250	225,000	
Store or bank entrance	500	150,000	
Office building restroom door	400	118,000	
School corridor door	80	15,000	
Office building corridor door	75	22,000	Average
Store restroom door	60	18,000	
Residential entrance door	40	15,000	
Residential restroom door	25	9,000	
Residential hallway door	10	3,600	Low
Residential closet door	6	2,200	

350 SERIES AND 1351 GATE CLOSERS - NO OPTIONS

Degree of Swing – Suffix -180
Single acting, heavy-duty floor closers have a deadstop. This means that the door cannot go past a certain point. The SEC27-180 allows the door to swing to 180°.

Non-Hold Open – SEC closers are non-hold open

Less Cement Case – Suffix LCC
For existing installations or when cement case has been sent earlier in construction. Closer will be packaged without the cement case.

Less Top Pivot – Suffix LTP
For unusual head conditions where the top pivot cannot be used, the closer is shipped without the top pivot.

Extended Spindle – Suffix Extra Length
Any special floor covering or severe door undercuts will affect spindle height. In these applications, an extended spindle may be required. See product template to determine if an extended spindle is needed. Extended spindles available in 1/2" increments up to 2" longer than standard.

CERTIFICATIONS, LIMITED WARRANTY, SPECIFICATIONS

SPECIALTY CLOSERS

CERTIFICATIONS

The 350 gate closers and SEC27-180 closers are in compliance with ANSI/BHMA A156.4 standards.
See individual products for sub-section.

LIMITED WARRANTY

Gate closers are warranted for 2-years against defect; SEC27-180 specialty closers are warranted for 10-years against defect. See Price Book for specific details of the limited warranty.

SPECIFICATIONS

Interior Gate Closer

All interior gates shall use model 350 closers. Closers shall be mounted above the floor and may be single or double acting, depending on hanging means. Closers shall have hydraulic closing speed adjustment. Units shall have built-in hold open.

Exterior Gate Closer

All exterior gates shall be model 1351. They shall be surface type with non-corrosive tracks. Track shall be two sided to keep debris from collecting. Must accommodate gates with top cross member or open spokes.

Security Closer

Closer shall be model SEC27-180 concealed floor closer package. Cement case to be cast iron with cast-in integral anchor extensions. 1/4" thick steel cover plate to be recessed into lip on cement case. Closer mechanism to have individual hydraulic cylinders for closing functions and adjustable hydraulic backcheck and be operated by a torsion spring. Closing and latch speed to be controlled by two independent valves. Closer to have built-in dead stop. Bottom arm shall be 1/2" thick steel. Top pivot shall be asylum type with Torx® security fasteners.

How to Determine Hand of Door

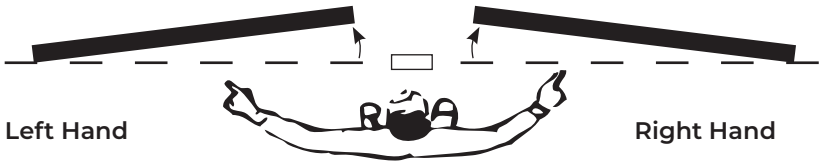

Face a door swinging open away from you. If it opens to the right, it is right handed. If it opens to the left, it is left handed.

Experience a safer and more open world

MODEL 354

Application

- Double acting, non-handed
- Maximum weight: 75 lbs.
- Dwarf doors from 2'2" to 3'0" wide (660 x 914mm)

Product Description & Features

- Recommended for office rail gates, partitions, and lavatory stall doors
- Body mounts under gate
- Surface mounted top pivot: 3541020
- 1-3/4" door thickness
- Maximum opening 90°
- Arm adjustment door normally comes to rest at closed position. If door is to remain open, arm is set on spindle so door comes to rest at 90°
- Package also includes closer bracket and flange style arm
- Frame carries full weight of door
- Quiet control; no slamming or flapping
- All moving parts enclosed and fully immersed in lubricating checking fluid
- Painted finishes only
- Not compliant with ICC/ANSI A117.1 low opening force requirements

Compliance

- ANSI C09053

Technical Information

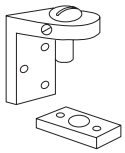

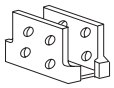

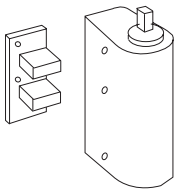

MODEL 355

Application

- Double acting, non-handed

Product Description & Features

Identical to 354 except:

- Mortise top pivot: 3551020

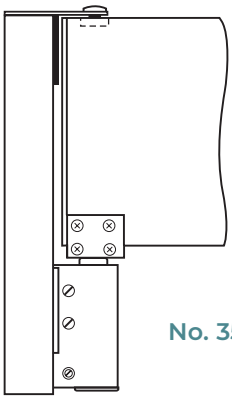

No. 354

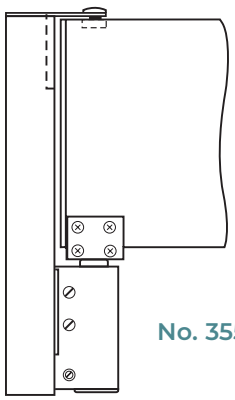

No. 355

MODEL 356

Application

- Double acting, non-handed
- Maximum weight: 75 lbs.
- Dwarf doors from 2'2" to 3'0" wide (660 x 914mm)

Product Description & Features

- Recommended for office rail gates, partitions, and lavatory stall doors
- Body mounts under the gate
- Surface mounted top pivot: 3541020
- 1-3/4" door thickness
- Maximum opening 90°
- Arm adjustment door normally comes to rest at closed position. If door is to remain open, arm is set on spindle so door comes to rest at 90°
- Package also includes closer bracket and arm that may be surface mounted or mortised
- Frame carries full weight of door
- Quiet control; no slamming or flapping
- All moving parts enclosed and fully immersed in lubricating checking fluid
- Painted finishes only
- Not compliant with ICC/ANSI A117.1 low opening force requirements

COMPLIANCE

- ANSI C09503

Technical Information

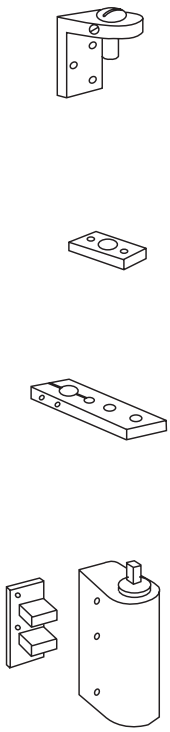

MODEL 357

Application

- Double acting, non-handed

Product Description & Features

Identical to 356 except:

- Mortise top pivot: 3551020

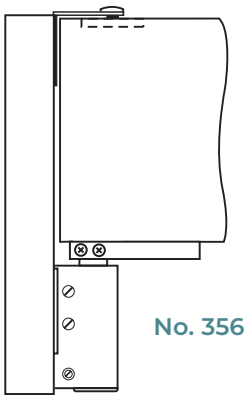

No. 356

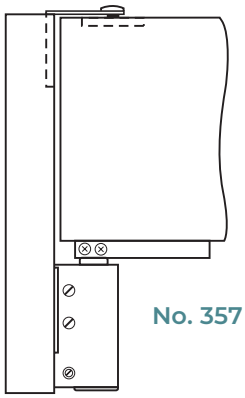

No. 357

MODEL 359

Application

- Single acting, non-handed
- Maximum weight: 75 lbs.
- Dwarf doors from 2'2" to 3'0" wide (660 x 914mm)

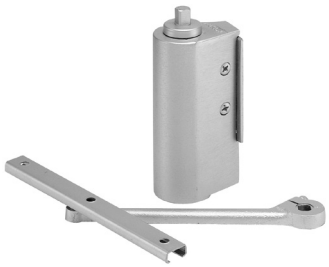

Product Description & Features

- Recommended for office rail gates, partitions, and lavatory stall doors
- Closer mounts under the door
- 1-3/4" door thickness
- Maximum opening 140°
- Surface mounted to edge of partition with edge wide enough for 1-1/2" bracket
- Butt hinges by others
- Frame carries full weight of door
- Track style arm
- Package includes closer, bracket, and slide track arm
- Painted finishes only
- Not compliant with ICC/ANSI A117.1 low opening force requirements

COMPLIANCE

- ANSI C09503

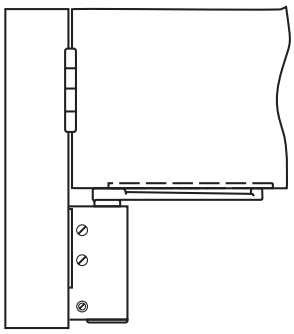

Technical Information

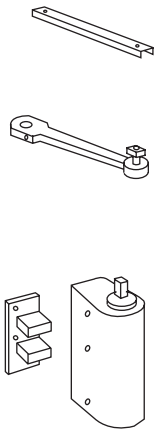

MODEL 354

(A) Jamb portion
01960-*AS

(B) Gate portion
35064-*AS

(E) Bracket
3549000-*
(includes closer mtg. screw kit)

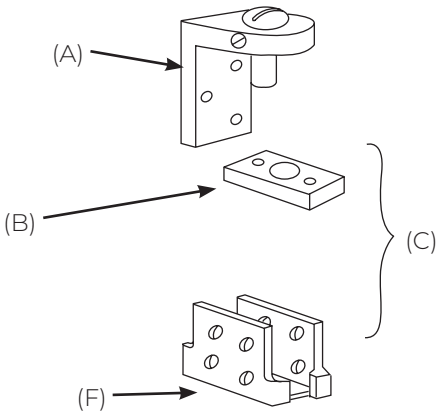

(C) Top pivot package
3541020-*
(includes A, B and attaching screws)

(F) Arm with screws
3542026-*

(D) Closer body
X03540370-*
(includes E)

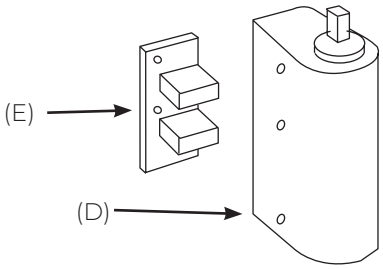

Screw Kits

Top pivot
107017-*

Closer mtg.
107350

MODEL 355

(A) Jamb portion
0490-*AS

(B) Gate portion
35064-*AS

(E) Bracket
3549000-*
(includes closer mtg. screw kit)

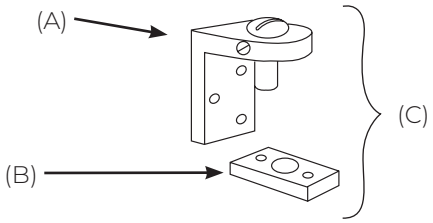

(C) Top pivot package
3551020-*
(includes A,B and attaching screws)

(F) Arm with screws
3542026-*

(D) Closer body
X03540370-*
(includes E)

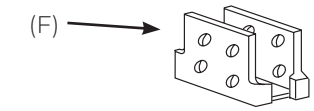

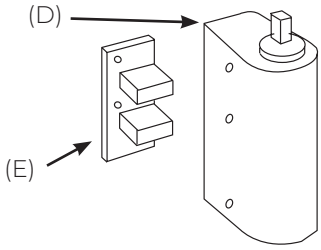

Screw Kits

Top pivot
107017

Closer mtg.
107350

**specify finish*

PARTS DRAWINGS

SPECIALTY CLOSERS

MODEL 356

(A) Jamb portion
01960-*AS
(B) Gate portion
35064-*AS
(D) Bushing only
35051
(included in arm package)
(F) Bracket
3549000-*
(includes closer mtg. screw kit)

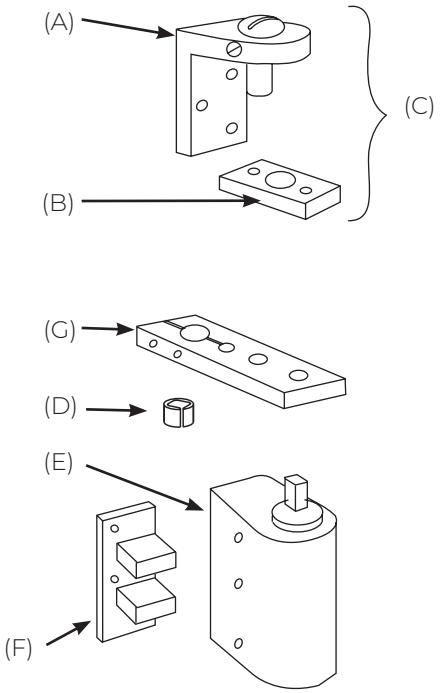

(C) Top pivot package
3541020-*
(includes A, B and attaching screws)
(G) Arm with screws
3562020-*
(includes D and attaching screws)
(E) Closer body
X03540370-*
(includes F)

Screw Kits

Top pivot
107017 -*

Arm
107359

Closer mtg.
107350

MODEL 357

(A) Jamb portion
0490-*AS
(B) Gate portion
35064-*AS
(D) Bushing only
35051
(included in arm package)
(F) Bracket
3549000-*
(includes closer mtg screw kit)

Screw Kits

Top pivot
107017-*

Arm
107359

Closer mtg.
107350

*specify finish

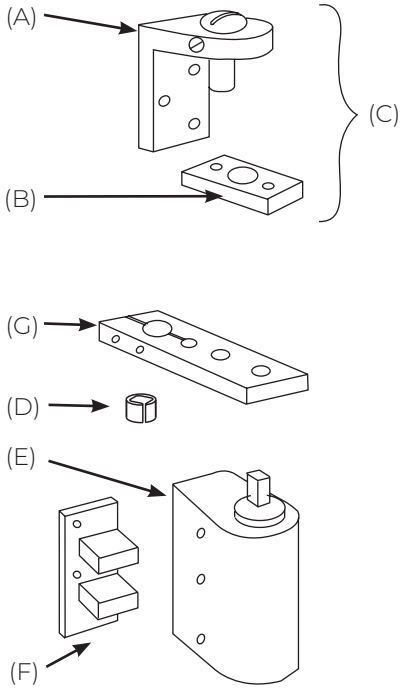

(C) Top pivot package
3551020-*
(includes A, B and attaching screws)
(G) Arm with screws
3562020-*
(includes D and attaching screws)
(E) Closer body
X03540370-*
(includes F)

MODEL 359

(A) Arm rail
35510-*

(B) Arm with screw & bushing
35535-*

(C) Bushing only
35051
(included in arm package)

(F) Bracket
3549000-*
(includes closer mtg. screw kit)

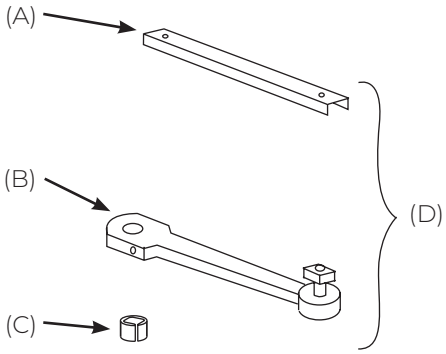

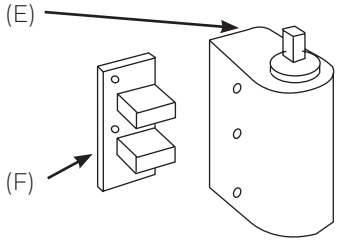

*specify finish

(D) Arm & rail package
3592010-*
(includes A, B, C and attaching screws)

(E) Closer body
X03540370-*
(includes F)

Screw Kits

Arm
107003

Closer mtg.
107350

Experience a safer
and more open world

MODEL 1351

Application

- Single acting
- Exterior ornamental iron gates
- Weight to 250 lbs.
- Gate maximum 4'6" x 10'0" (1372 x 3048mm)

Product Description & Features

Recommended for exterior gates on high-end residences and commercial building campuses.

- Includes closer body, mounting bracket, arm and slide track
- Track has pass thru hole to avoid debris build-up
- Components are rust-resistant
- Surface closer has adjustable latch speed, closing speed and backcheck
- May be mounted on cross-member or spokes
- Hanging means by others
- All weather fluid
- All machine screws
- Black finish only

Technical Information

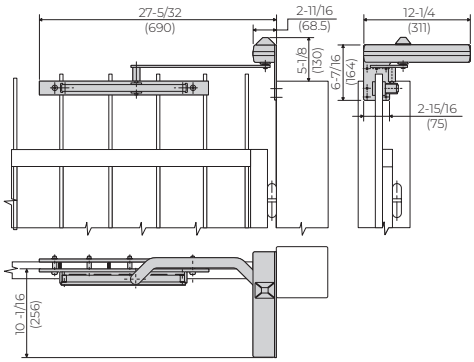

MODEL SEC27-180

Application

- Single acting, handed
- Interior security doors
- Weight to 650 lbs.
- Door width up to 4'0" (1219mm)

Product Description & Features

Recommended for non cell doors in detention facilities or psychiatric centers

- Non-hold open only
- FA180 top pivot included
- FA19 intermediate pivot recommended; order separately
- Door will swing to 180°, trim permitting
- Built-in hydraulic backcheck at 160°
- Cast iron cement case with cast in extensions for positive anchorage in floor
- Solid 1/4" (6mm) thick steel floor plate
- Cast-in lip to provide positive containment of cement case in floor
- Sealed closer standard
- Heavy-duty forged bottom arm
- Adjustable closing speed
- Doors 60" (1524mm) to 90" (2286mm) in height should use one intermediate pivot. Every additional 30" (762mm) of door height warrants another intermediate pivot
- Delayed action not available
- Furnished with Torx® screws
- PH option not available

Optional Features

- Extended spindles available in 1/2" increments up to 2" longer than standard

Compliance

- This closer is for fire-rated openings (up to 3 hour assemblies). Only non-hold open closers are used. FA19 intermediate pivot required: order separately.

Technical Information

Frame stop required

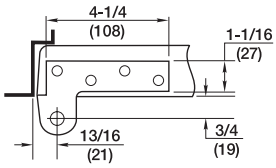

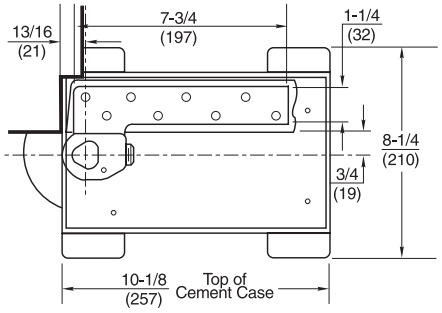

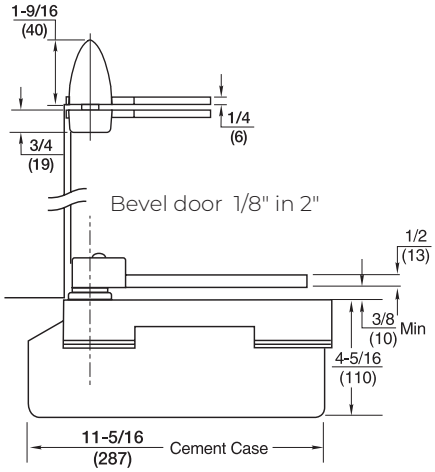

MODEL SEC27-180

Right hand shown
3/4" offset only

(A) Pivot pin assembly
181770-Asy

(B) Hex cap
181778 -*

(C) Arm cap & screw
012142R*ATS (RH, BRS)
012142L*ATS (LH, BRS)
012144R*ATS (RH, SS)
012144L*ATS (LH, SS)

(D) Arm x locking screw
18550-Asy (RH)
18650-Asy (LH)

(E) Arm locking screw only
88905-PKG (5)

(F) Arm shims
275065-PKG (5)

(G) Arm bearing washer
275062-PKG (5)

(H) Collar
259000 -*

(I) Floor plate with screws
274056 -*

(J) Closer body (specify complete model no. x LAP)

(K) Cement case with screws
253001SEC

(L) Bottom Arm Package
252056R* (RH)
252056L* (LH)
(Includes C, D, H and attaching screws)

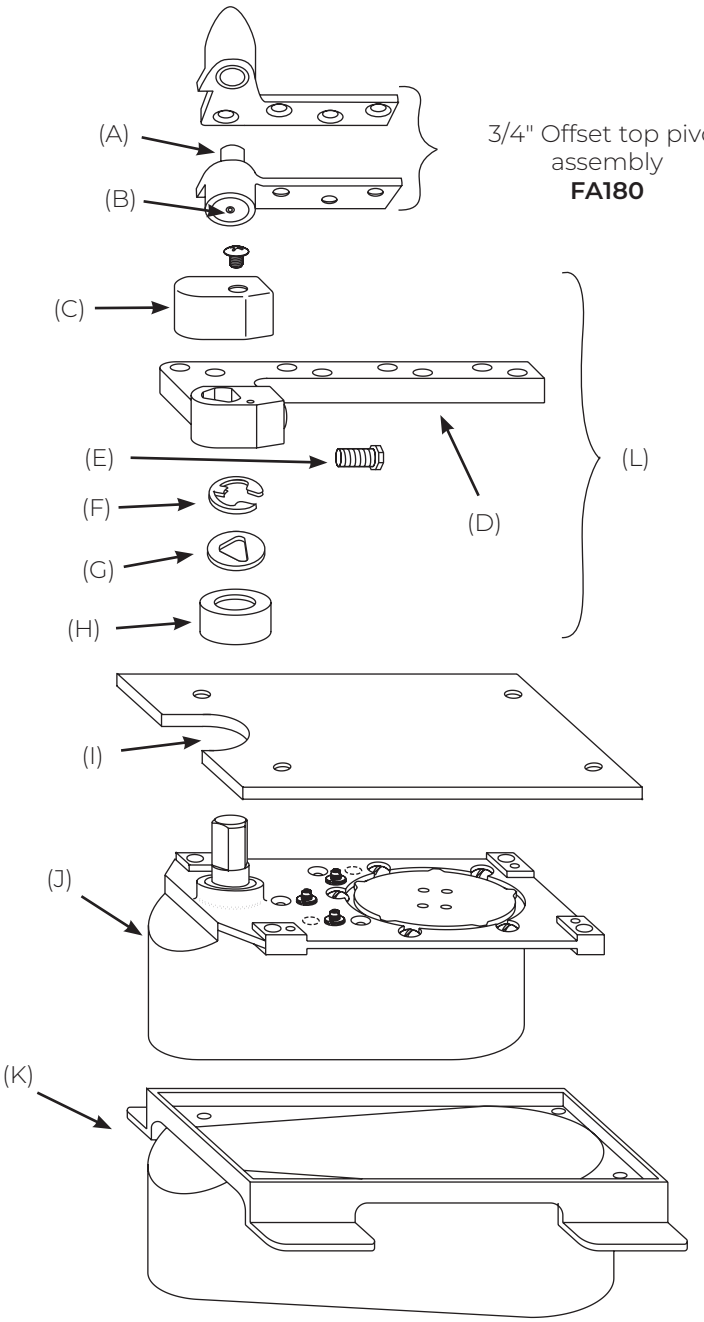

Screw Kits

FA180 Torx®
107014 - *T machine (2 required)
107114 - *T wood (2 required)

Arm
107144 machine (2 required)
107048 wood (2 required)

Floor plate
107021 -*

*specify finish

QUICK REFERENCE OF OPTIONS/HOW TO ORDER

SPECIALTY CLOSERS

QUICK REFERENCE OF OPTIONS

Prefix	Model	Degree of Hold Open	Holding Options	General Options	Fire Rated	Handed	Maximum Door Weight
	354	90	A		No	No	75
	355	90	A		No	No	75
	356	90	A		No	No	75
	357	90	A		No	No	75
	359		N		No	No	75
	1351		N				250
	SEC27-180		N	Extended spindle	Yes	Yes	650

HOW TO ORDER

SEC27-180
Model

354	Interior Gate
355	Interior Gate
356	Interior Gate
357	Interior Gate
359	Interior Gate
1351	Exterior gate
SEC27-180	Security

*specify finish

A
Hold Open (SEC27-180 only)

N	Non-hold open
A	Automatic hold open

LTP
Suffix (SEC27-180 only)

Extended Spindles

LAP	Closer body only
LFP	Less floor plate
LCC	Less cement case
LTP	Less top pivot
SPLO	Special layout #

Hand

Blank	Double Acting or Non Handed
RH	Right Hand
LH	Left Hand

626
Finish

350 Series Only	
689 (US28)	Aluminum, painted
690 (US20)	Dark bronze, painted
691 (US10)	Light bronze, painted
696 (US4)	Gold, painted
1351 Only	
622 (US19)	Flat black coated
SEC27-180 Only	
605 (US3)	Bright brass, clear coated
606 (US4)	Satin brass, clear coated
611 (US9)	Bright bronze, clear coated
612 (US10)	Satin bronze, clear coated
613 (US10B)	Antique bronze
613E (US10BE)	Dark oxidized satin bronze - equiv.
619 (US15)	Satin nickel plated, clear coated
622 (US19)	Flat black coated
BSP	Black suede powder coat
WSP	White suede powder coat

Experience a safer and more open world

NOTES

SPECIALTY CLOSERS

The ASSA ABLOY Group is the global leader in access solutions. Every day, we help billions of people experience a more open world.

ASSA ABLOY Opening Solutions leads the development within door openings and products for access solutions in homes, businesses and institutions. Our offering includes doors, frames, door and window hardware, mechanical and smart locks, access control and service.

Since 1880, Norton Rixson door controls have been an integral part of schools, hospitals and businesses around the globe. When you need products and people that perform at the highest level, rely on Norton Rixson – From Open to Close.

NORTON RIXSON | WWW.NORTONRIXSON.COM
3000 Highway 74 East | Monroe, NC 28112 | Tel: 1 877 974 2255

ASSA ABLOY OPENING SOLUTIONS DOOR SECURITY SOLUTIONS CANADA | www.assaabloydss.ca
160 Four Valley Drive | Vaughan, Ontario, L4K 4T9 Canada | Tel: 800 461 3007

Copyright © 2001-2025, ASSA ABLOY Accessories and Door Controls Group, Inc. All rights reserved. Reproduction in whole or in part without the express written permission of ASSA ABLOY Accessories and Door Controls Group, Inc. is prohibited.

44038-07/25