FDLS

Inverted Split Y No Vision Door Louver

PRODUCT CUT SHEET

PROJECT:
SUBMITTED BY:
DATE:
NOTES:

For 1 ⅛" and Over Thick Doors

- 18 Ga. Cold Rolled Steel
- Mitered and Welded Corners
- Countersunk Mounting Screw-Holes
- #8 X ¾" Phillips Head SMS
- Available in Uneven and Fractional Sizes
  - Fractional Sizes Fabricated with 1½" Frame
- Free Area 50%
- Gray Primer (GPZ) Powder Coat Finish

Available Options

- Powder Coat Color Options - See Color Chart on *ngp.com*
- Aluminum Insect Screen - 22 Ga. ⅛" Square Mesh Installed on Exterior Side Unless Requested Otherwise
- Torx Security Screws
- Electrogalvanized Steel
- Zinc Electroplating (Not Available on Insect Screen)

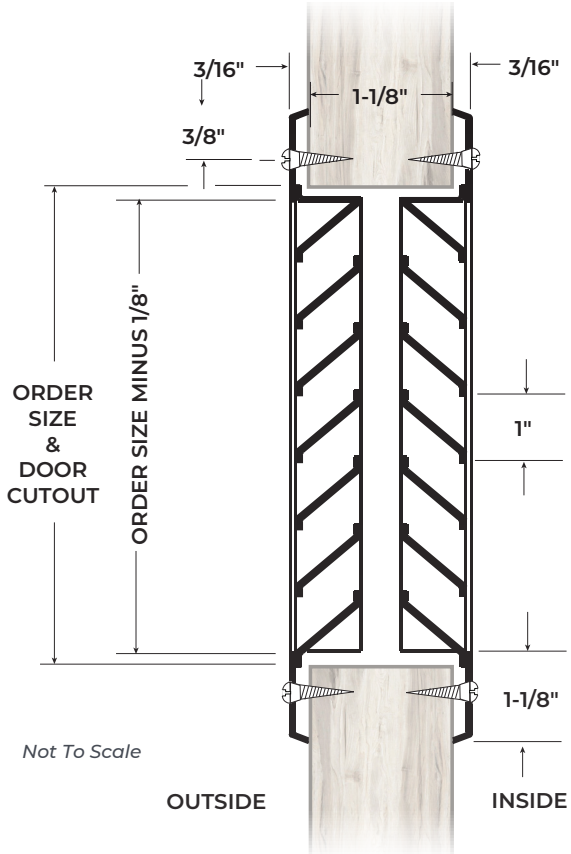

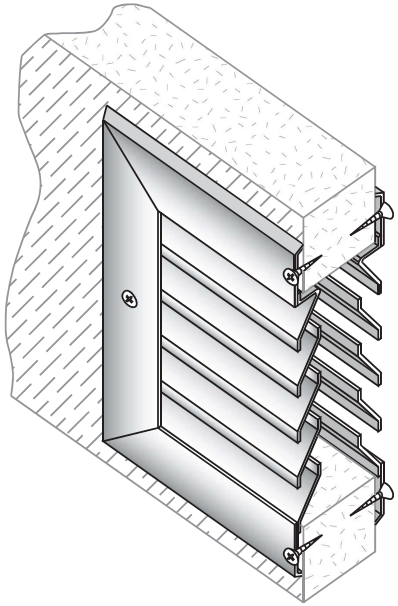

NGP-LIT-FDLS-PCS-1223-A

NATIONAL GUARD PRODUCTS, INC.

MEMPHIS
4985 East Raines Road
Memphis, TN 38118

CARSON CITY
3689 Arrowhead Drive
Carson City, NV 89706

Fax: (800) 255-7874
Email: info@ngp.com

Quotes: quotes@ngp.com
Orders: orders@ngp.com

ngp.com
1-800-NGP-RUSH