Installation manual

** **IMPORTANT NOTE**: **This installation unstruction is only used with solid flat wood door, and IM as reference only for other type of doors. If you have any questions, please consult a structural engineer.** **

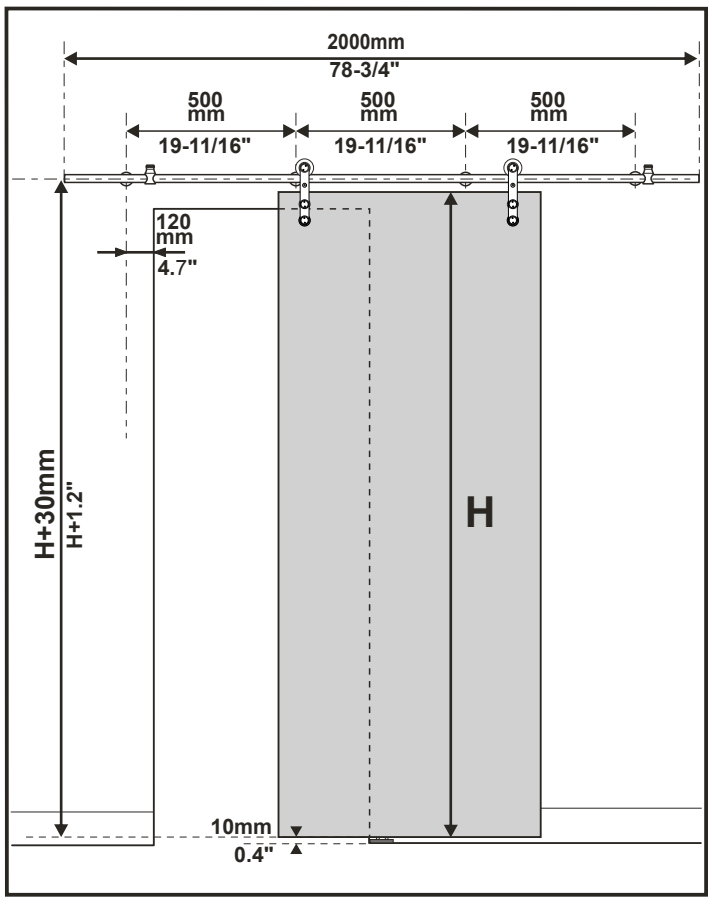

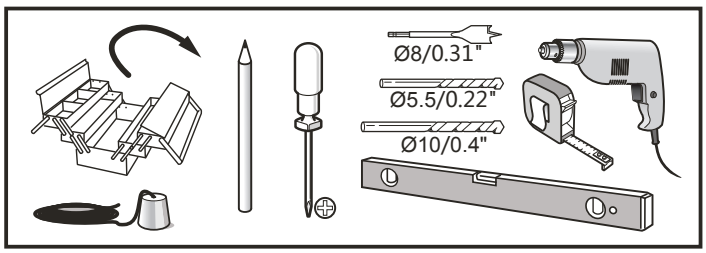

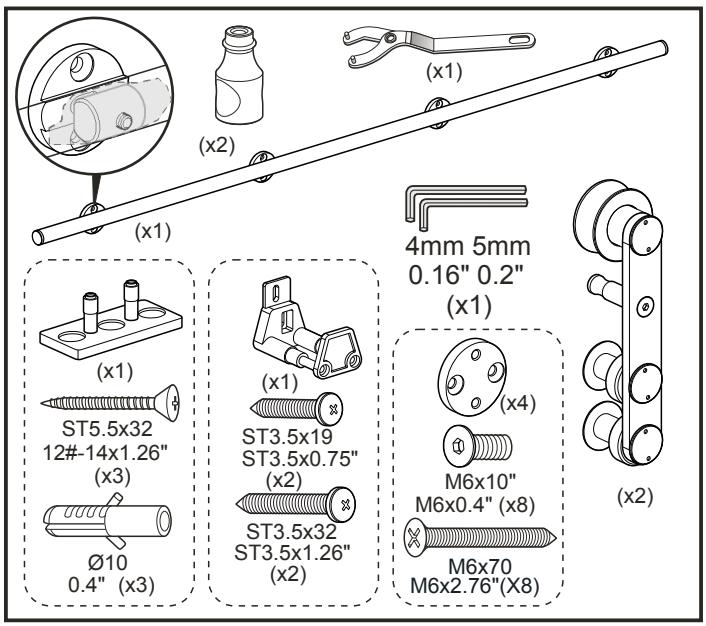

1

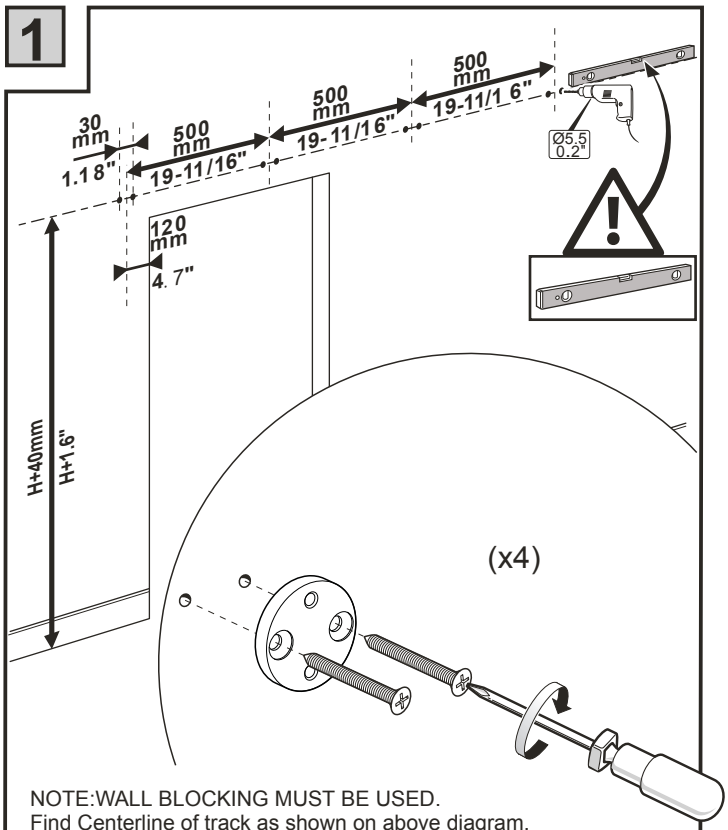

NOTE:WALL BLOCKING MUST BE USED.
Find Centerline of track as shown on above diagram. Using a level, mark your horizontal line. Mark bracket screw locations, as shown on above diagram into wall blocking. Attach wall portion of brackets as shown.

2

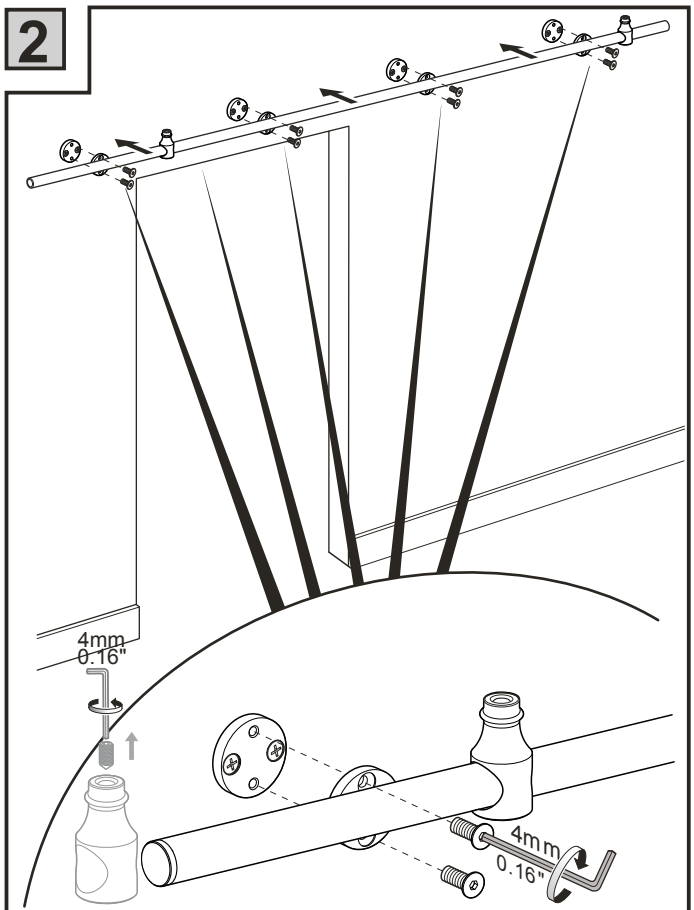

Attach track to wall brackets as shown.

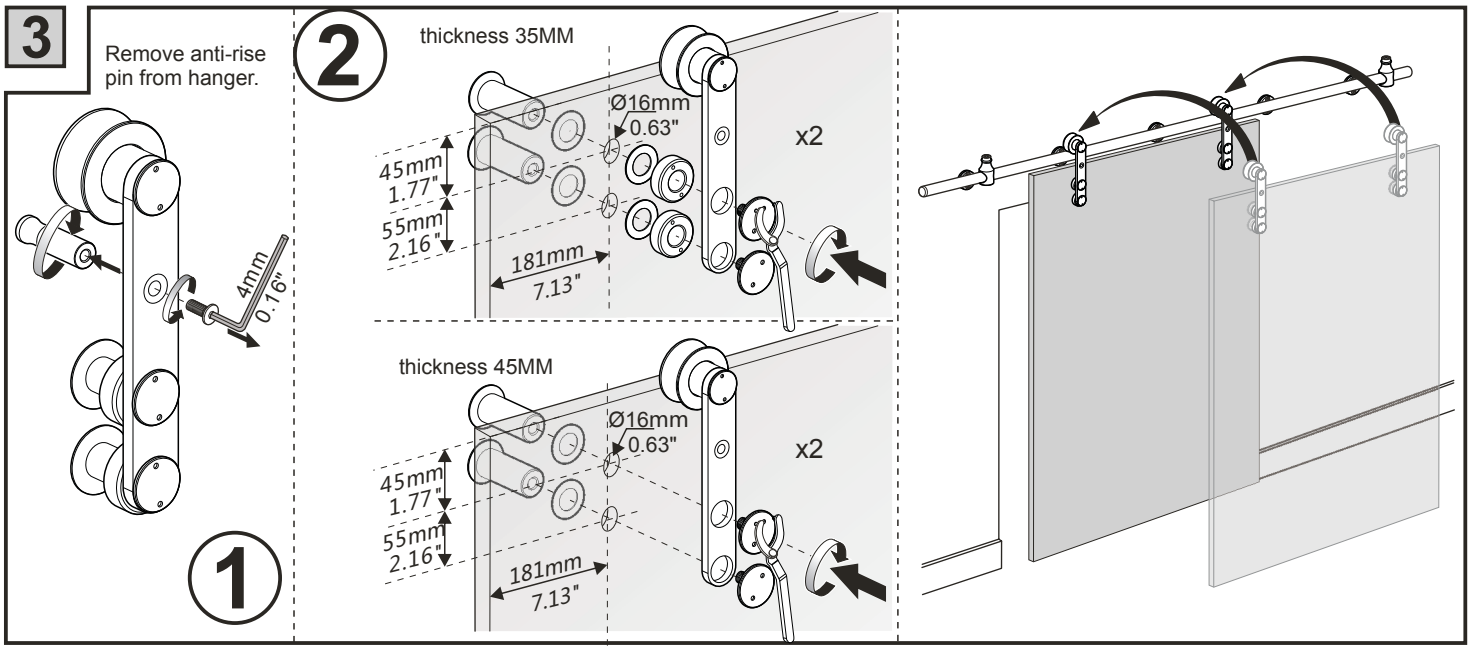
3
Remove anti-rise pin from hanger.
4mm
0.16"
1
2
thickness 35MM
Ø16mm
0.63"
x2
45mm
1.77"
55mm
2.16"
181mm
7.13"
thickness 45MM
Ø16mm
0.63"
x2
45mm
1.77"
55mm
2.16"
181mm
7.13"

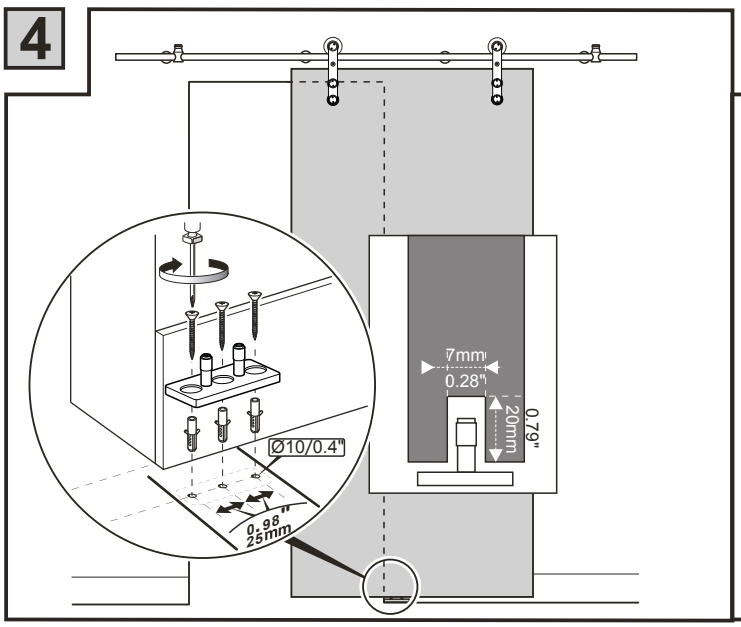
4
7mm
0.28"
20mm
0.79"
Ø10/0.4"
0.98"
25mm

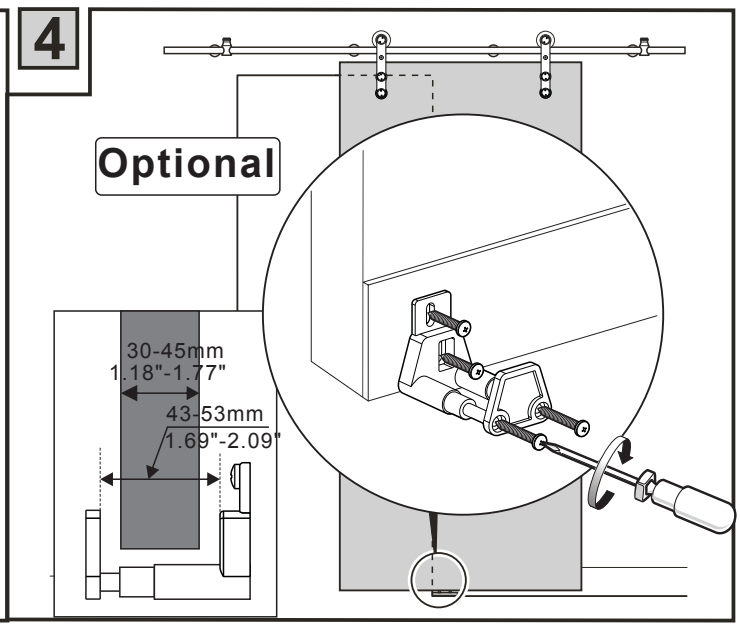
4
Optional
30-45mm
1.18"-1.77"
43-53mm
1.69"-2.09"

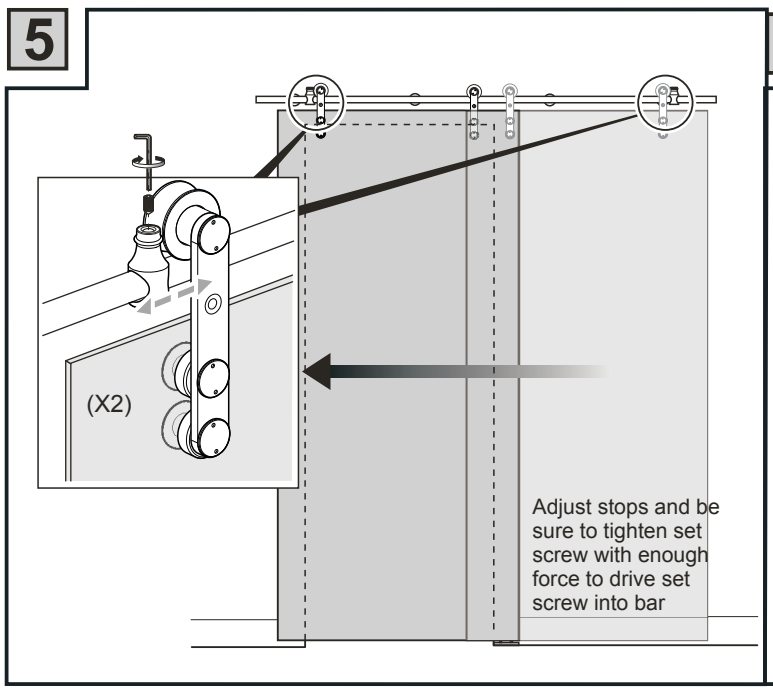
5
(X2)
Adjust stops and be sure to tighten set screw with enough force to drive set screw into bar

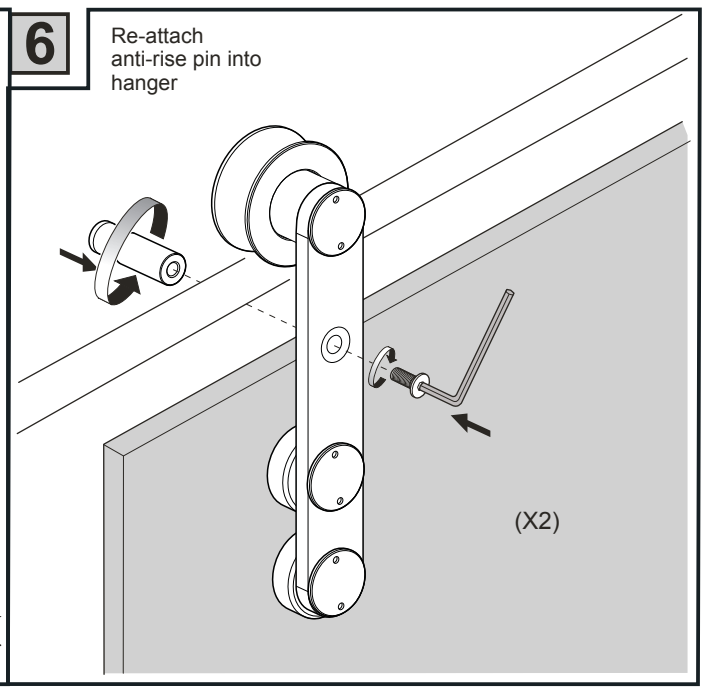
6
Re-attach anti-rise pin into hanger
(X2)